4043-4B PANTHER TOWER & 43839 RAISED DRAINER
WITH 408X OR 525SS FAUCET
MOUNTING TEMPLATE

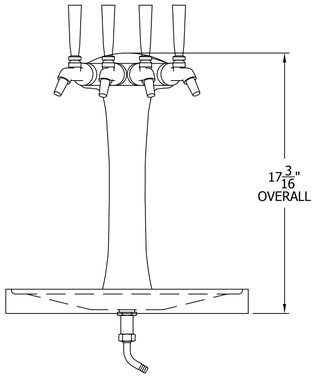

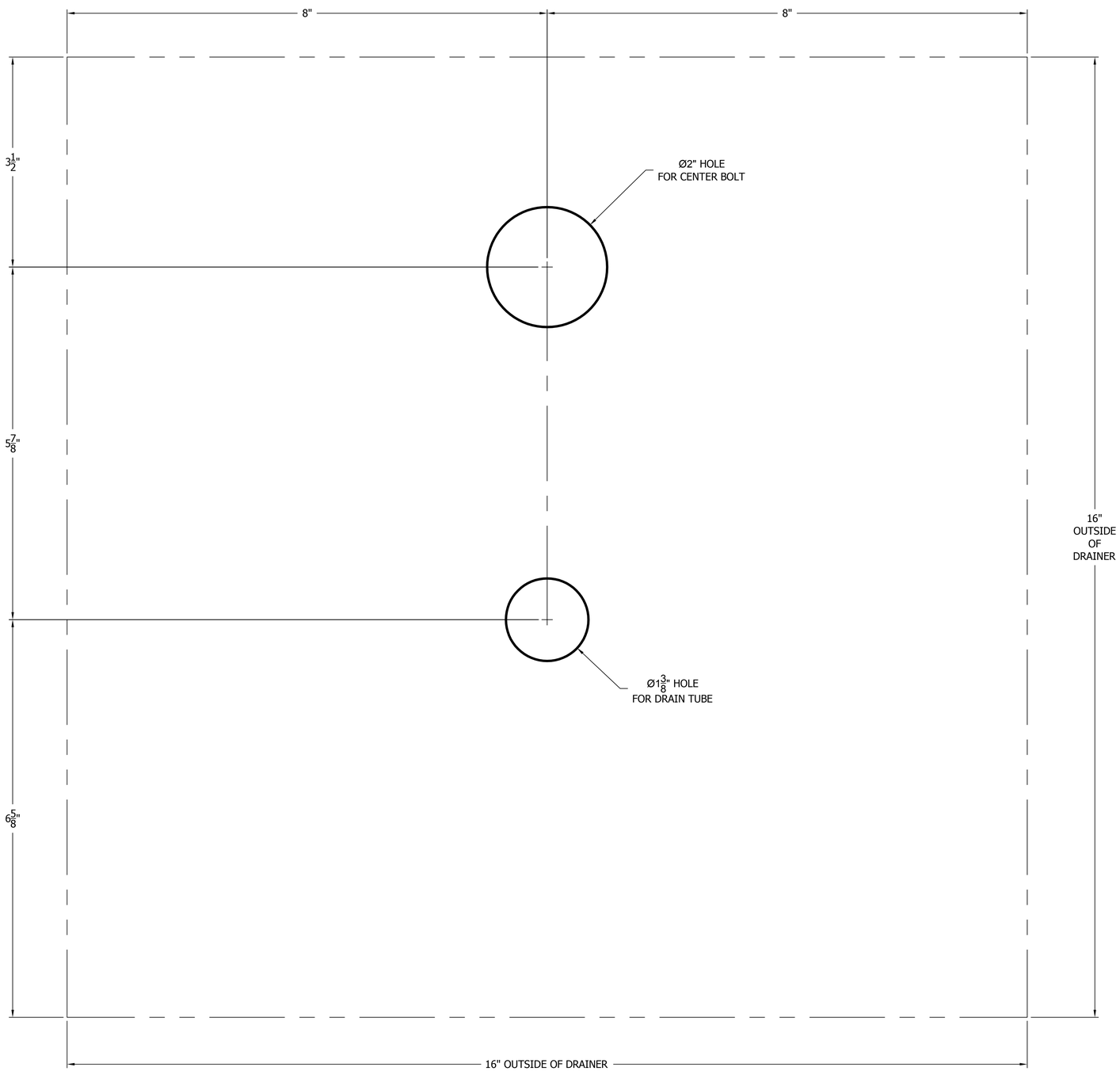

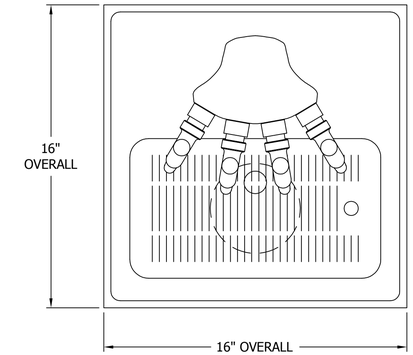

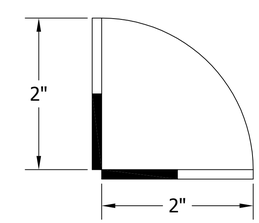

ATTENTION INSTALLERS

VERIFY SCALE OF PRINT
BY CHECKING THESE DIMENSIONS
PRIOR TO INSTALLATION OF BEER HEAD
(EACH SIDE SHOULD MEASURE
EXACTLY 2.00 INCHES)

PERLICK CORPORATION
MILWAUKEE, WI 53223

PROPERTY OF THE PERLICK CORP.
NOT TO BE COPIED OF USED DETRIMENTAL TO OUR INTERESTS.

SCALE: FULL	
DR.: JMP DATE: 2/2/2012	
LAST MODIFIED 2/2/2012	94184